Continuous-Variable Quantum State Transfer with Partially Disembodied Transport

Jing Zhang†, Changde Xie, Kunchi Peng
State Key Laboratory of Quantum Optics and Quantum Optics Devices, Institute of Opto-Electronics, Shanxi University, Taiyuan 030006, P.R.China

arXiv:quant-ph/0503184v2 30 Sep 2005

We propose a new protocol of implementing continuous-variable quantum state transfer using partially disembodied transport. This protocol may improve the fidelity at the expense of the introduction of a semi-quantum channel between the parties, in comparison with quantum teleportation using the same strength of entanglement. Depending on the amount of information destroyed in the measurement, this protocol may be regarded as a teleportation protocol (complete destruction of input state), or as a $1 \rightarrow M$ cloning protocol (partial destruction), or as a direct transmission (no destruction). This scheme can be straightforwardly implemented with the experimentally accessible setup at present.

Quantum teleportation is an important protocol in the quantum information and quantum communication fields, which embodies a basic law of quantum mechanics - quantum no cloning theorem[1]. This protocol enables reliable transfer of an arbitrary, unknown quantum state from one location to another[2]. This transfer is achieved by utilizing shared quantum entanglement and classical communication between two locations. The fact that no information whatsoever is gained on either particle is the reason why quantum teleportation escapes the verdict of the no-cloning theorem. In recent years, quantum teleportation has played a central role in quantum information science and has become an essential tool in diverse quantum algorithms and protocols[3, 4].

Quantum teleportation was originally developed in the context of the discrete quantum variables, with the central notion of a single quantum bit (qubit) as a basic unit. In recent years, theses concepts have been extended to the domain of continuous variable (CV), which have attracted a lot of interest and appear to yield very promising perspectives concerning both experimental realizations and general theoretical insights, due to relative simplicity and high efficiency in the generation, manipulation, and detection of CV state. The first results in this direction concerned quantum teleportation[5, 6] and experimentally implemented to teleport coherent states with a fidelity $\mathcal{F} = 0.58 \pm 0.02$[7]. The fidelity, which quantifies the success of a teleportation experiment, is defined as $\mathcal{F} \equiv \left\langle \psi^{in} \right| \hat{\varrho}^{out} \left| \psi^{in} \right\rangle$, where "in" and "out" denote the input and the output state. Later, continuous-variable quantum teleportation was successfully performed by other groups[8, 9, 10]. Quantum teleportation succeeds when the fidelity exceeds the classical limit ($\mathcal{F}_c = 1/2$ for a coherent state input) which is the best achievable value without the use of entanglement[11]. The value of 2/3 is referred to as the no-cloning limit, because surpassing this limit warrants that the teleported state is the best remaining copy of the input state[12]. Exceeding this bound would require an EPR (Einstein-Podolsky-Rosen) channel with more than 3 dB squeezing.

In the protocol of quantum teleportation[2], Alice completely destroys the unknown quantum state by measurement, so divides its full information into two parts, one purely classical and the other purely non-classical, and sends them to Bob through two different channel. In this Letter, we propose a new scheme of quantum state transfer using partially disembodied transport. Alice divides the unknown quantum state into two parts, one part is not destroyed and the other part is destroyed by the joint Bell-state measurement with a half of the entangled EPR beam. The undestroyed part is displaced by the measured outcomes and then is transmitted to Bob. This channel is regarded as the semi-quantum channel, whose features depends on the amount of information destroyed in the measurement. Bob will retrieve the initial quantum state under the assistance of his other half of the entangled EPR beam. Also, no information is gained in this process, so it is still to obey the no-cloning theorem. In this case, the fidelity boundary between classical and quantum transfer depends on the amount of the destroyed information. The fidelity in this protocol may be improved at the expense of the introduction of a semi-quantum channel between the parties, in comparison with quantum teleportation under the same strength of EPR entanglement. This novel quantum state transfer can be straightforwardly implemented with the present teleportation setup[7, 8, 9, 10]. Further, we will show the partially disembodied quantum state transfer relates to the optimal Gaussian cloning machine[13, 14, 15, 16, 17, 18].

A schematic setup for CV quantum state transfer using partially disembodied transport is depicted in Fig.1. The quantum states we consider in this Letter can be described using the electromagnetic field annihilation operator $\hat{a} = (\hat{X} + i\hat{Y})/2$, which is expressed in terms of the amplitude $\hat{X}$ and phase $\hat{Y}$ quadrature with the canonical commutation relation $[\hat{X}, \hat{Y}] = 2i$. Without a loss of generality, the quadrature operators can

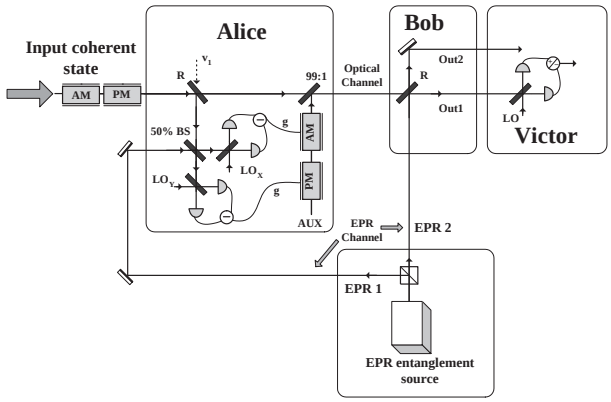

FIG. 1: Schematic of the CV quantum state transfer using partially disembodied transport. BS: Beam splitter, g: Electronic gain, LO: Local oscillator, AM: Amplitude modulator, PM: Phase modulator and AUX: Auxiliary beam.

be expressed in terms of a steady state and fluctuating component as $\hat{A} = \langle \hat{A} \rangle + \delta \hat{A}$, which have variances of $V_A = \langle \delta \hat{A}^2 \rangle (\hat{A} = \hat{X}$ or $\hat{Y})$. First Alice and Bob share the entangled EPR beams, one of which is send to a sender Alice and the other is to a receiver Bob. At Alice's sending station the coherent states of optical fields are used as input states. The quantum state $\hat{a}_{in}$ is divided by a beamsplitter with a variable reflectivity R, $0 < R < 1$. Alice combines the reflected output state and her entangled beam at a 50/50 beamsplitter, and then measures $\hat{X}$ and $\hat{Y}$ quadratures by two homodyne detectors, respectively. Thus Alice only destroys the partial information of the unknown quantum state from the reflected field by measurement. Hence, the reflectivity R represents the amount of the destroyed information of the unknown quantum state. Alice uses the photocurrents measured by two homodyne detectors to modulate the amplitude and phase of an auxiliary beam (AUX) via two independent modulators with a scaling factor g[19]. This beam is then combined at a 99:1 beam splitter with the other undestroyed part of the the unknown input quantum state, hereby displacing this part according to measurement outcomes[7]. In the Heisenberg representation, the displaced field is expressed by

$$\begin{aligned} \hat{a}_{disp} &= (\sqrt{1-R} + \frac{g}{\sqrt{2}}\sqrt{R})\hat{a}_{in} + (\sqrt{R} - \frac{g}{\sqrt{2}}\sqrt{1-R})\hat{v}_1 \\ &\quad - \frac{g}{\sqrt{2}}\hat{b}^{\dagger}_{EPR1} \end{aligned} \tag{1}$$

where $\hat{v}_1$ refer to the annihilation operator of the vacuum noise entering the beamsplitter 1, $\hat{b}_{EPR1}$ is the annihilation operator of EPR beam 1, and $\hat{a}_{disp}$ is the annihilation operator for the displaced state. The displaced field, whose vacuum noise $\hat{v}_1$ is cancelled when g is taken to be $\sqrt{2R/(1-R)}$, is given by

$$\hat{a}^c_{disp} = \frac{1}{\sqrt{1-R}}\hat{a}_{in} - \sqrt{\frac{R}{1-R}}\hat{b}^{\dagger}_{EPR1}. \tag{2}$$

Then the displaced field $\hat{a}^c_{disp}$ is transmitted to a remote station Bob who reconstructs the unknown quantum state. In this process the displaced field plays a role of an optical channel (semi-quantum channel). In the ideal case of perfect EPR entanglement, one cannot get any information of the input state $\hat{a}_{in}$ from the optical channel because the amount of quantum noise of $\hat{b}_{EPR1}$ is big enough to hide all information of the transmitted state. After receiving the information from Alice, Bob reconstructs the unknown state by interfering the transmitted optical field with his entangled beam at an other beamsplitter with the same reflectivity R. In the absent of losses, the output states from two output parts of beamsplitter are written by

$$\begin{aligned} \hat{a}_{out1} &= \hat{a}_{in} + \sqrt{R}(\hat{b}_{EPR2} - \hat{b}^{\dagger}_{EPR1}) \\ \hat{a}_{out2} &= \sqrt{\frac{R}{1-R}}\hat{a}_{in} - \frac{R}{\sqrt{1-R}}\hat{b}^{\dagger}_{EPR1} \\ &\quad -\sqrt{1-R}\hat{b}_{EPR2} \end{aligned} \tag{3}$$

where $\hat{b}_{EPR2}$ is the annihilation operator of Bob's EPR beam 2. The EPR entangled beams have the very strong correlation property, such as both their difference-amplitude quadrature variance $\left\langle \delta(\hat{X}_{b_{EPR1}} - \hat{X}_{b_{EPR2}})^2 \right\rangle = 2e^{-2r}$, and their sum-phase quadrature variance $\left\langle \delta(\hat{Y}_{b_{EPR1}} + \hat{Y}_{b_{EPR2}})^2 \right\rangle = 2e^{-2r}$, are less than the quantum noise limit, where r is the squeezing factor. Thus, normalizing the variance of the vacuum state to unity, the variances of the output 1 for the amplitude and phase quadratures are $\left\langle \delta\hat{X}^2_{out1} \right\rangle = \left\langle \delta\hat{X}^2_{in} \right\rangle + 2Re^{-2r}$ and $\left\langle \delta\hat{Y}^2_{out1} \right\rangle = \left\langle \delta\hat{Y}^2_{in} \right\rangle + 2Re^{-2r}$. In the case of unity gain, the fidelity for the Gaussian states is simply given by

$$\mathcal{F} = \frac{2}{\sqrt{\left(1 + \left\langle \delta\hat{X}^2_{out} \right\rangle\right)\left(1 + \left\langle \delta\hat{Y}^2_{out} \right\rangle\right)}}. \tag{4}$$

For the classical case of $r = 0$, i.e., the EPR beams were replaced by uncorrelated vacuum inputs, the fidelity of output 1 is found to be $\mathcal{F}_{boun} = 1/(R+1)$ which correspond to the fidelity boundary between classical and quantum transfer as shown in Fig.2. When Alice and Bob share a EPR entanglement $r > 0$, the fidelity of the output 1 is $\mathcal{F}_1 = 1/(1 + Re^{-2r})$. It clearly shows that the fidelity boundary degrades as the amount of the destroyed information of the unknown quantum state increases, and the quantum fidelity may be improved at the expense of the introduction of a semi-quantum channel between the parties when the destroyed information decreases for a given EPR entanglement. Here, we don't consider the optimization of the entangled resource. Comparing with our protocol, the fidelity of continuous variable quantum teleportation for a given entanglement resource is optimized by means of the local unitary operations applicable

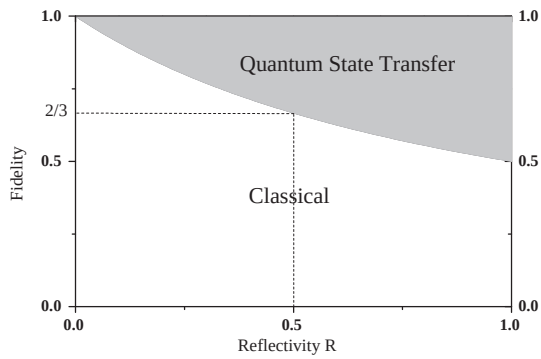

FIG. 2: The fidelity of quantum state transfer with partially disembodied transport as a function of the reflectivity R (the amount of the destroyed information of the unknown quantum state).

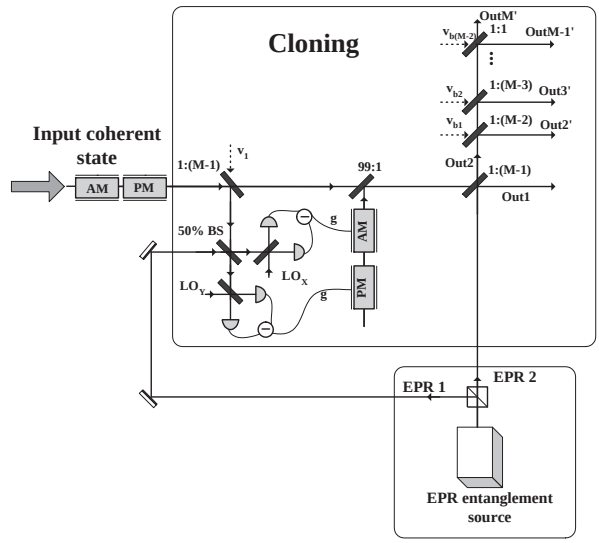

FIG. 3: Schematic of the quantum state transfer with partially disembodied transport viewed as $1 \to M$ optimal Gaussian cloning machine.

to the entangled resource itself [20]. Thus, these methods to optimize the fidelity of quantum teleportation may be applied to our protocol directly and improve fidelity further.

The proposed system has different characteristic and use when R has different value. Let us first consider the case where $R \to 1$. This means that the unknown quantum state is destroyed completely. In this case, our scheme is equivalent to the protocol of all-optical teleportation presented in [21], and also corresponds to standard quantum teleportation[7], in which the displacement operation is implemented by Bob instead of by Alice. When $R = 0.5$, only half information of the unknown quantum state is destroyed. For the classical case of $r = 0$, the fidelity of both $\hat{a}_{out1}$ and $\hat{a}_{out2}$ is found to be $2/3$. This scheme corresponds to the optimal fidelity for a $1 \to 2$ symmetric Gaussian cloning machine[18], which is experimentally realized recently[22]. When Alice and Bob share a EPR entanglement $r > 0$, the fidelity of the output 1 is $\mathcal{F}_1 = 2/(2 + e^{-2r})$, which is always larger than $2/3$, and the output 2 is $\mathcal{F}_2 = 2/(2 + e^{2r})$, which is always smaller than $2/3$. The result corresponds to the optimal fidelity for a $1 \to 2$ asymmetric Gaussian cloning machine[16, 17]. Thus Bob can achieve $\mathcal{F}_1 > 2/3$ for an unknown coherent state only by way of shared quantum entanglement and without requirement of 3 dB squeezing ($e^{-2r} = 0.5$), but at the expense of the introduction of a semi-quantum channel between the parties. When $R \to 0$, this means that the unknown quantum state is transmitted directly to Bob.

Now we show that our proposal may be viewed as a $1 \to M$ optimal Gaussian cloning machine when the reflectivity $R = (M-1)/M$ as shown in Fig.3. At Bob's station, the output 2 is sent together with $M-2$ ancilla modes through an $(M-2)$-splitter. The ancilla modes $\hat{v}_{b1}, \hat{v}_{b2}, \ldots \hat{v}_{b(M-2)}$ are vacuum modes. The output states are expressed by

$$\begin{aligned}
\hat{a}_{out1}^{1\to M} &= \hat{a}_{in} + \frac{\sqrt{M-1}}{\sqrt{M}}(\hat{b}_{EPR2} - \hat{b}_{EPR1}^{\dagger}) \qquad (5)\\
\hat{a}_{out2'}^{1\to M} &= \hat{a}_{in} - \frac{M-1}{\sqrt{M(M-1)}}\hat{b}_{EPR1}^{\dagger}\\
&\quad - \frac{1}{\sqrt{M(M-1)}}\hat{b}_{EPR2} + \frac{\sqrt{M-2}}{\sqrt{M-1}}\hat{v}_{b1}\\
&\cdots.
\end{aligned}$$

For the classical case of $r = 0$, the fidelity of any outputs is found to be $\mathcal{F}_{boun}^{1\to M} = M/(2M-1)$, which corresponds to the optimal fidelity for a $1 \to M$ symmetric Gaussian cloning machine[18]. When Alice and Bob share a EPR entanglement $r > 0$, only the fidelity of the output 1, which is $\mathcal{F}_1^{1\to M} = \frac{M}{M+(M-1)e^{-2r}}$, is greater than $\mathcal{F}_{boun}^{1\to M}$. We see the fidelity boundary between classical and quantum transfer of arbitrary input coherent states depends on how many identical copies are produced from original one in an optimal cloner, which lies in $1/2 \le \mathcal{F}_{boun} \le 2/3$.

Due to the imperfection of EPR Entanglement, some information of the unknown quantum state may be extracted from optical channel. Here we will investigate the amount of the information by means of the signal to noise $(S/N) = V_s/V_n$ where V_s is signal variance and V_n is the quantum noise variance. For getting the information of the unknown quantum state from the optical channel, one simultaneously measures the amplitude and phase quadrature of the optical channel using a 50% beamsplitter. Using Eq.(2), the signal to noise of the

measured quadratures are given by

$$(S/N)_{X(Y)} = V_{X_{in}(Y_{in})}/[\frac{e^{2r}+e^{-2r}}{2} + \frac{1}{1-R}(1-\frac{e^{2r}+e^{-2r}}{2})]. \quad (6)$$

For the same strength of EPR entanglement Eq.(6) shows that the information of the unknown quantum state leaked from optical channel decreases when the amount of the destroyed quantum state increases.

The another important feature of the optical channel is its dependence on the propagation losses. If η expresses the transmission losses of the optical channel, the displaced field transmitted to a remote station Bob is given by

$$\hat{a}^c_{disp} = \frac{1}{\sqrt{1-R}}\hat{a}_{in} + \frac{(\eta-1)}{\sqrt{R}}\hat{v}_1 - \frac{1-\eta(1-R)}{\sqrt{R(1-R)}}\hat{b}^\dagger_{EPR1} + \sqrt{1-\eta^2}\hat{v}_c. \quad (7)$$

Here $g=\sqrt{2}(1-\eta(1-R))/\eta\sqrt{R(1-R)}$ ensures that the displaced field contains the input field $\hat{a}_{in}$ by a factor of $1/\sqrt{1-R}$. At Bob's station, the output state 1 is given by

$$\hat{a}_{out1} = \hat{a}_{in} + \sqrt{R}(\hat{b}_{EPR2} - \hat{b}^\dagger_{EPR1}) - \frac{(1-\eta)(1-R)}{\sqrt{R}}\hat{b}^\dagger_{EPR1} - \frac{(1-\eta)\sqrt{1-R}}{\sqrt{R}}\hat{v}_1 + \sqrt{(1-\eta^2)(1-R)}\hat{v}_c. \quad (8)$$

Eq.(8) clearly shows that the influence of the propagation losses on the transmitted state decreases as the amount of the destroyed information of the unknown quantum state increases. This is due to the fact that the output mode 1 only contains $1-R$ portion of the displaced field and R portion of entangled beam 2 at the Bob's beamsplitter. Thus the optical channel for $R\to 0$ is referred to as the quantum channel, which transfers the unknown quantum state directly, and the optical channel for $R\to 1$ becomes the classical channel, which is completely independent of the losses. We refer the optical channel for $0<R<1$ as "semi-quantum" channel in order to distinguish it from the classical and quantum channel.

In conclusion, we have proposed an experimentally feasible scheme of quantum state transfer using partially disembodied transport for continuous quantum variables. The fidelity boundary between classical and quantum transfer of arbitrary input coherent states depends on the amount of the destroyed information. The fidelity in this protocol may be improved at the expense of the introduction of a semi-quantum channel between the parties, in comparison with quantum teleportation for a given EPR entanglement. We show that the partially disembodied quantum transfer is related to the $1\to M$ optimal Gaussian cloning machine. The optical channel of partially disembodied transport of an unknown quantum state is gradually changed from quantum to classical channel with the increasing reflectivity R. This new scheme of implementing quantum state transfer helps to deepen our understanding of the properties of quantum communication systems enhanced by EPR entanglement and its multi-usability and flexibility might have remarkable application in quantum communication and computation.

†Corresponding author's email address: jzhang74@yahoo.com, jzhang74@sxu.edu.cn

ACKNOWLEDGMENTS

J. Zhang thanks T. Zhang, J. Gao, and Q. Pan for the helpful discussions. This research was supported in part by National Natural Science Foundation of China (Approval No.60178012, No.60238010), and Program for New Century Excellent Talents in University.

[1] W. K. Wootters and W. H. Zurek, Nature (London) **299**, 802 (1982).
[2] C. H. Bennett et al., Phys. Rev. Lett. **70**, 1895 (1993).
[3] S. L. Braunstein and A. K. Pati, Quantum information with continuous variables (Kluwer Academic Publishers, Dordrecht, 2003).
[4] M. A. Nielsen and I. L. Chuang, Quantum Computation and Quantum Information (Cambridge University Press, Cambridge, 2000).
[5] L. Vaidman, Phys. Rev. A **49**, 1473 (1994).
[6] S. L. Braunstein and H. J. Kimble, Phys. Rev. Lett. **80**, 869 (1998).
[7] A. Furusawa et al., Science **282**, 706 (1998).
[8] W. P. Bowen et al., Phys. Rev. A **67**, 032302 (2003).
[9] X. Jia, et al., Phys. Rev. Lett. **93**, 250503 (2004).
[10] N. Takei, et al., e-print quant-ph/0501086.
[11] S. L. Braunstein et al., J. Mod. Opt. **47**, 267 (2000); K. Hammerer et al., Phys. Rev. Lett. **94**, 150503 (2005).
[12] F. Grosshans and P. Grangier, Phys. Rev. A **64**, 010301 (2001).
[13] N. Cerf et al., Phys. Rev. Lett. **85**, 1754 (2000).
[14] G. M. D'Ariano et al., Phys. Rev. Lett. **86**, 914 (2001).
[15] S. L. Braunstein et al., Phys. Rev. Lett. **86**, 4938 (2001).
[16] J. Fiurasek, Phys. Rev. Lett. **86**, 4942 (2001).
[17] A. Ferraro et al., J. Opt. Soc. Am. B **21**, 1241 (2004).
[18] N. Cerf and S. Iblisdir, Phys. Rev. A **62**, 040301 (2000).
[19] P. K. Lam et al., Phys. Rev. Lett. **79**, 1471 (1997).
[20] G. Adesso and F. Illuminati, quant-ph/0412125; J. Fiurasek, Phys. Rev. A **66**, 012304 (2002); L. Mista et al., Phys. Rev. A **71**, 032342 (2005); S. Pirandola et al., Phys. Rev. A **71**, 042326 (2005).
[21] T. C. Ralph, Opt. Lett. **24**, 348 (1999).
[22] U. L. Andersen, V. Josse and G. Leuchs, e-print quant-ph/0501005.